SECTION 07511
BUILT-UP BITUMINOUS ROOFING

PART 1 – GENERAL

1.1 SCOPE

a. The extent of Built-up roofing system work is indicated by provisions of this section, and is designed to include roofing, composition flashing, stripping, and roofing accessories integrally related to roofing installation.
b. The new roof system shall consist of a CA Title 24 Compliant, CRRC approved mineral surfaced fiberglass cap sheet set in Type III asphalt over three (3) Type VI (6) fiberglass felts set in Type III asphalt, and a mechanically attached fiberglass base sheet.
c. The Contractor shall install new lead penetration flashings. Where penetrations cannot be disconnected, install a split lead flashing assembly with the all seams to be hot soldered in place. **No pitch pans will be allowed.**

1.2 REFERENCES

a. ANSI/ASTM D41 - Asphalt Primer Used in Roofing, Damp proofing, and Waterproofing.
b. ANSI/ASTM D226 - Asphalt-Saturated Organic Felt Used in Roofing and Waterproofing.
c. ASTM D312 - Asphalt Used in Roofing.
d. ASTM D2178 - Asphalt Glass Felt Used in Roofing and Waterproofing.
e. ASTM D2626 - Asphalt-Saturated and Coated Organic Felt Base Sheet Used in Roofing.
f. ASTM D-4586 - Asphalt Roof Cement.
g. ASTM D3909 - Asphalt Roll Roofing (Glass Felt) Surfaced with Mineral Granules.
h. Factory Mutual (FM) Engineering Corporation - Roof Assembly Classifications.
i. National Roofing Contractors Association (NRCA) - Roofing and Waterproofing Manual.
j. NBS-55 - Preliminary Performance Criteria for Bituminous Membrane Roofing.
k. Underwriters Laboratories (UL) - Fire Hazard Classifications.

1.3 SUBMITTALS

a. Product Data: Provide Manufacturer's standard product data and MSDS sheet for all membrane and bitumen materials, base flashing materials, and all other roofing materials to be used for the project.
b. Samples: Submit two samples, 3 x 4 inch in size illustrating Manufacturer's standard colors of granular surfaced sheet materials.
c. Manufacturer's Installation Instructions.
d. Manufacturer's Certificate: Certify that the specified system and products meet or exceed the requirements for the specified Manufacturer's Guarantee.
e. Field Reports: Indicate procedures followed, ambient temperatures and wind velocity during application.
f. Manufacturer's Published Maintenance Recommendations and/or Guidelines.
g. Contractor's Safety Manual for employees.
h. Detailed schedule stating: Start Date (by building), and estimated completion date.

1.4 QUALIFICATIONS

a. Manufacturer: Company specializing in manufacturing products specified in this Section for a period of not less than ten (10) years.
b. Applicator: Company specializing in performing the work of this Section for a period of not less than five (5) years, and approved by the manufacturer to construct and repair the manufacturer's guaranteed roofing systems.

1.5 REGULATORY REQUIREMENTS

a. Conform to applicable code (U.L. Class A) for roof assembly fire hazard requirements.

1.6 PRE-INSTALLATION CONFERENCE

a. Convene prior to commencing work of this Section. Meet at project site with Architect, Contractor, Contractor's foreman, Owner's roofing inspector, Manufacturer's Representative and Owner's Representative.
b. Review installation procedures and coordination required with related Work. Owner's roofing inspector will document information from this meeting, and a copy will be distributed to all parties. The minutes of this meeting will become part of the project requirements and specifications.

1.7 DELIVERY, STORAGE, AND HANDLING

a. Deliver products in manufacturer's original containers, dry, undamaged, seals and labels intact.
b. Store products in weather protected environment, clear of ground and moisture. All waterproof tarps shall be opaque.
c. Stand roll materials on end, with labels right side up.
d. Storage of materials shall not block any entrance or exits at any time.
e. Use only kettles and/or tankers that have automatic thermostats to control the asphalt temperature. Thermostats must be clean and easy to read.
f. All materials must be inspected and verified for use on the project. Materials that are found that are not approved shall be marked as rejected and removed from the job-site immediately.
g. Do not at any time allow asphalt to be heated beyond the finished blowing temperature. If the asphalt has been heated beyond the finished blowing temperature, discontinue the application until the asphalt has been allowed to cool to an acceptable temperature. Asphalt that has been heated beyond the finished blowing temperature for a period of four (4) hours shall be discarded and not used for the roof system application.

1.8 ENVIRONMENTAL REQUIREMENTS

a. Do not apply roofing membrane during inclement weather or ambient temperatures below 40 degrees F including wind chill factor.
b. Do not apply roofing membrane to damp or frozen deck surface.
c. Do not apply mineral surfaced cap sheet material below 60 degrees F.

1.9 QUALITY ASSURANCE

a. All primary products used for the project i.e., rolled material, asphalt, mastic, etc., shall be produced by a manufacturer that has successfully produced these materials for a period no less that ten (10) years. Secondary products used in the application of the roofing system shall be approved in writing by the manufacturer of the primary products used for the project who will issue the guarantee.

b. Contractor shall have a minimum of five (5) years of experience installing the system(s) specified for this project. He shall be currently licensed to perform work in the state of California.

c. Contractor is required to provide experienced supervision on the job at all times. The Contractor shall have a non-working foreman onsite at all times that has the authority to make decisions regarding the project on a daily basis.

1.10 TEMPORARY FACILITIES AND CONTROL

a. The Contractor shall use all means necessary to maintain the property in proper and safe condition throughout progress of the work.

b. Protect building contents and grounds during the process of the work. Protect all paving and buildings adjacent to hoist, kettle, and stinger pipe with canvas prior to and during the work. Windows, doorways, loading docks, walkways, etc., may require additional protection beyond what is described herein.

c. The Contractor shall remove all debris daily from the roof. No throwing or tossing of the material will be allowed. Enclosed chutes, or bundling of the material prior to off loading is required.

d. Installation of the new roof system shall be accomplished only during periods of dry weather. No work shall be performed if precipitation is forecast during the working day. Roofing application shall be completed each day in a watertight manner. **No phased roofing will be allowed.** Contractor shall install a watertight seal (temporary waterstops) at the end of each day. Before commencement of work the following day, the watertight seal shall be **COMPLETELY** removed.

e. The Contractor shall provide special protection and prevent heavy traffic on completed roofing when ambient temperatures exceed 80 degrees Fahrenheit.

f. Installation of new roofing shall be accomplished in a manner so that no bitumen leakage into the building occurs.

1.11 SAFETY AND HEALTH

a. All requirements regarding "Safety and Health" are solely the contractors.

1.12 WARRANTY

a. The roof system has been designed to meet the requirements of a Manufacturer's Twenty (20) Year "No dollar Limit" Guarantee. The Contractor shall install all materials related to the design in a manner so that the roof system qualifies for a manufacturer's warranty. Failure to provide the necessary material and workmanship to qualify for the warranty will be solely the responsibility of the Contractor.

b. The cost to furnish or provide a Manufacturer's Twenty (20) Year "No Dollar Limit", or "No Penal Sum", Non-Prorated Guarantee as described herein shall be included in the Base Bid Total Cost.

c. The Contractor shall guarantee the roof system for a period of five (5) years from the date of acceptance by the Owner or his representative. The Contractor shall make all repairs during this period in order to maintain the roof in a watertight condition without additional cost to the Owner.

PART 2 – PRODUCTS

NOTE: ALL MATERIALS USED ON THIS PROJECT SHALL BE ASBESTOS FREE

2.1 MANUFACTURERS - SHEET AND BITUMEN MATERIALS

a. Acceptable/Approved Manufacture's:
   1. GAF ROOFING MATERIAL: N-B-5-M/P6 (EC).
   2. JOHNS MANVILLE: Spec # 5GNC-CR.
   3. OR EQUAL
b. Alternate Manufacturers: Must be approved by the Owner and the Owner's roofing inspector PRIOR TO SUBMITTING BID PACKAGE.
c. Substitutions: Substitutions will be accepted and reviewed for use on the project. The Contractor shall supply all information regarding the proposed roofing material manufacturer along with the bid package. <u>If the Contractor fails to submit a substitute manufacturer with the bid it will be deemed the bid is based upon the material/Manufacturer specified herein</u>.

2.2 BASE PLY MATERIALS

a. General Requirements: Base ply materials shall be compatible with the roofing membrane and produced by the same manufacturer.
b. GAFGLAS #75 Base Sheet, U. L. Type G-2, BUR Label, ASTM D-4601, Type II. ICBO #ER-4287.

2.3 REINFORCING PLY SHEET MATERIALS

a. General Requirements: Reinforcing ply materials shall be compatible with roofing membrane and produced by the same manufacturer.
b. GAFGLAS FlexPly 6 ply sheet conforming to, U. L. Type G1 BUR Label, ASTM D-2178, Type VI, asphalt impregnated glass fiber mat.

2.4 MINERAL SURFACED CAP SHEET

a. GAFGLAS EnergyCap conforming to, U.L. Type G3 BUR Label, ASTM D-3909, asphalt impregnated glass fiber mat, ceramic granular-surfaced and factory applied layer of EnergyCote elastomeric coating, 73 lbs./100 SF minimum.

2.5 BITUMINOUS MATERIALS

a. Asphalt Bitumen:
   1. **Trumbull Asphalt meeting ASTM D-312, Type III, 185-205 degrees F softening point.**
b. Asphalt Primer: ASTM D-41, FS SS-A-701.
c. Plastic Cement: ASTM D-4586.

2.6 BASE FLASHINGS

a. General Requirements:
   1. Base flashing materials shall be compatible with roofing membrane and produced by the same manufacturer.
   2. The flashing listed within the specification consists of a smooth surfaced modified bitumen and CA Title 24 Compliant, CRRC approved cap sheet base flashing assembly. The Contractor shall install the flashing as required by the manufacturer of the material being installed in order to achieve the guarantee:
      a) GAF RUBEROID 20 (smooth):
         1) Mechanically attached GAFGLAS #75 Base Sheet required on all wood substrates.
      b) GAFGLAS EnergyCap

2.7 PARAPET WALL FLASHINGS

a. General Requirements:
   1. Parapet wall flashing materials shall be compatible with roofing membrane and produced by the same manufacturer.
   2. The flashing listed within the specification consists of a Type VI ply sheet and CA Title 24 Compliant, CRRC approved cap sheet parapet wall flashing assembly:
      a) GAFGLAS FlexPly 6 installed vertically (roll-width) and set into a solid application of the specified asphalt:
         1) Mechanically attached GAFGLAS #75 base sheet required on wood walls.
         2) Attach base sheet to the substrate 12 inches on center in all directions.
      b) GAFGLAS EnergyCap installed vertically (roll-width) and set into a solid application of the specified asphalt.
      c) Back nailing of membrane installed on steep slope substrate is required:
         1) Comply with roofing material Manufacturer's back nailing requirements.

2.8 CANTS

a. Fiber Cant: Asphalt impregnated wood fiberboard, Preformed to 45 degree angle, 5 inch face.

2.9 WOOD NAILERS

a. Nailers shall be #2 or better lumber. Nailers shall be pressure treated for rot resistance wolmanized or osmoses treated. Creosote and asphaltic preservatives are not acceptable.
b. Wood nailers shall conform to Factory Mutual's Loss Prevention Data Sheet 1-49 recommendations.

2.10 FASTENERS

a. Roofing Nails: Galvanized or non-ferrous type, size as required to suit application.

b. Base Sheet Fasteners: 12 gauge nail with annular or serrated shank and integral one inch diameter disc, a minimum of 1-1/2" in length, to penetrate the into the underlying substrate a minimum of 3/4".
c. Base Flashing to Wood Members: 1-1/2" barbed roofing nails through 1" metal discs.
d. Metal Flanges to Wood Deck: Annular threaded nail with 3/8" diameter head to penetrate wood a minimum of 1-1/2".
e. Base Flashing to Concrete or Masonry: Case hardened masonry nails, or as otherwise approved, through 1" metal discs.

2.11 SEALANTS AND CAULKING

a. Elastomeric Sealant: One part urethane, conforming to Federal Spec. #TT-S-00230C and/or TT-S-001543A.

2.12 MISCELLANEOUS

a. Fibrated Aluminum Coating: ASTM D 2824-82, Type II.
b. Woven Glass Fabric: ASTM D 1668, Type I.
c. Fibrated Asphalt Emulsion: ASTM D 1227-82, Type IV.
d. Walktred:
   1. Minimum 200 mil. thick reinforced, modified bitumen sheet with granules (color to be selected/approved by Architect):
      a) Walktred type must comply with Manufacturer's twenty (20) year NDL Guarantee requirements.

2.13 Refer to typical installation details at the end of this section for flashing of sealing conditions. These details supplement the details contained within the drawings.

PART 3 – EXECUTION

3.1 GENERAL

a. Install in accordance with the approved roofing manufacturer's written specifications and recommended details.
b. All components of the roofing system shall be dry when installed. All materials which become wet shall be removed before the end of the day.
c. Install roofing system and all accessory items in strict accordance with the roofing manufacturer's printed recommendations current at date of bidding documents. In the event that these specifications conflict with the manufacturer's printed recommendations, the manufacturer's recommendations take precedence.

3.2 EXAMINATION

a. Verify that surfaces and site conditions are ready to receive work.
b. Verify deck is supported and secured.
c. Verify deck is clean and smooth, free of depressions, waves, or projections, and properly sloped.
d. Verify deck surfaces are dry and free of moisture.
e. Verify roof openings, curbs, pipes, sleeves, ducts, and vents through roof are solidly set, and cant strips, nailing strips, and reglets are in place.

3.3 PREPARATION

a. Verify flatness and confirm that the joints do not exceed the APA maximum spacing recommendations.
b. Commencement of roofing application over any section will mean the Contractor accepts the substrate of that section, and he will be responsible for any cost that is required for any corrective action which may be required by his having started over an unsatisfactory surface.

3.4 BASE SHEET APPLICATION

a. Starting at the low point of the roof, install one ply of base sheet, side lap 2 inches and end lap 4 inches. Install at right angles to the slope of the roof. Nail sheets along the laps at intervals of not more than 9 inches, and stagger-nail down the center of the sheet on 12 inch centers in two (2) rows equidistant from the edge of the sheet. A tape and staple method is acceptable. Use of this type of securement must be approved in advance by the manufacturer in written form. The Contractor must have a minimum of two (2) working machines on the job at all times. Base sheet attachment must comply with FM1-90 wind uplift requirements for base sheet installation and Manufacturer's base sheet installation/attachment requirements:
   1. Requirement includes additional fasteners along roof area perimeter walls and at corner locations.
b. Wrinkles and ridges in the base sheet shall be cut and renailed with an additional layer of base sheet to allow a smooth surface.
c. At valleys and waterways, install a full width sheet of Type VI fiberglass felt into a solid application of the specified asphalt over the installed base sheet.

3.5 MEMBRANE APPLICATION

a. Install three (3) plies of Type VI fiberglass felt in continuous moppings of Type III asphalt in the following manner: Starting at the low point of the roof, install a 13⅞" width, then a 24¼" width, then a full 39⅝" width and follow with full 39⅝" width sheets, shingle fashion, lapping each proceeding ply 30", in such a manner that at least three (3) layers of ply sheet cover the base sheet at any one point. Install at right angles to the slope of the roof.
b. Apply membrane without wrinkles or tears, free from air pockets.
c. Extend membrane up cant strips a minimum of 2 inches onto vertical surfaces.
d. At the end of each day install temporary water cut-off consisting of two plies of felt or one ply of coated base sheet installed in moppings of asphalt. **COMPLETELY** remove temporary water cut-off before resuming roofing installation.

3.6 CONTRACTOR GUIDELINES

a. No roofing material shall be installed when moisture, such as dew, can be seen or felt on the surface where material(s) are to be installed.
b. No materials shall be installed when foaming, blistering, or bubbling of the hot asphalt occurs.
c. Moppings of hot asphalt shall be continuous and applied at a nominal rate of 25 pounds per 100 square feet. All interply asphalt shall be special steep, Type III, with 210 degrees minimum softening point.
d. Temperatures at the kettle shall be controlled so that asphalt temperature shall not exceed the asphalt manufacturer's maximum finished blowing temperature.
e. Rate of Bitumen Application:
   1. Fiberglass Felt: 25 pounds (nominal) per 100 square feet.

2. Fiberglass cap sheet: 30 pounds (nominal) per 100 square feet.

f. All membrane deficiencies, such as voids, bridging, fish mouths, cuts, tears, etc., shall be repaired in an acceptable manner. Incorporate into the repair as many plies as are affected by the deficiency.

g. For slopes greater than one inch per foot:
   1. Run all felts parallel to the slope.
   2. Back-nail felts at the leading edge on centers of 20 feet (1" - 2" slope); 10 feet (2" - 3" slope); 4 feet (3" - 6" slope).
   3. Nail the mineral surfaced cap sheet in the leading edge on the centers in (#2) above and on staggered six-inch centers at each end lap. All nails must be mopped over with asphalt and lapped by the following layer of cap sheet.

3.7 MINERAL SURFACED CAP SHEET APPLICATION

a. Cut roll into 12 –18 foot lengths. Allow to flatten and relax before installing.

b. Starting at the low point of the roof, install one ply of cap sheet, side lap 2 inches and end lap 6 inches in solid mopping of the specified asphalt. Install at right angles to the slope of the roof. Apply bitumen at 30 lbs/square (+/- 15 percent). Cap sheet end laps shall be staggered a minimum of three (3) feet.

3.8 FLASHINGS AND ACCESSORIES

a. Embed one ply of smooth surfaced modified bitumen reinforcing ply in hot steep asphalt, extending from eight (8) inches (minimum) up the vertical surface or from the top of the curb to a point at least three (3) inches past the toe of the cant strip onto the roof surface. This modified reinforcing ply should be installed over the finished field plies, prior to the installation of the mineral surfaced cap sheet.
   1. Mechanically attached GAFGLAS #75 base sheet required on all wood substrates prior to installation of the reinforcing ply:
      a) Attach base sheet to the wood substrate 12 inches on center in all directions.

b. Install field cap sheet surfacing two (2) inches above the top of the cant strip.

c. Install the mineral surfaced cap sheet flashing membrane a minimum eight (8) inches up the vertical surface or from the top of the curb to a minimum of six (6) inches past the toe of the cant strip onto the roof surface.

d. Secure the top edge of the base flashing at six (6") inches on center with the specified fastener.

3.9 WALL FLASHING (WALLS OVER 24 INCHES)

a. Embed one (1) layer of the specified ply sheet and one (1) layer of the specified cap sheet into solid applications of the specified asphalt over properly prepared and/or primed walls:
   1. Mechanically attached GAFGLAS #75 base sheet required on all wood substrates prior to installation of the specified ply sheet:
      a) Attach base sheet to the wood substrate 12 inches on center in all directions.

b. Nail the top of the wall flashing at six (6") inches on center with the specified fastener. If a sheet metal coping is used, the finished roofing shall be terminated at the outside edge of the wall prior to the metal coping installation.

3.10 DRAIN FLASHING

a. Drain rings shall be removed prior to the roofing application.

b. A new 4 pound lead flashing sheet shall be set into a solid coating of flashing grade roof cement over the installed field plies. The lead flashing sheet shall be of sufficient size to extend across the bottom of the drain sump and into the drain bowl a minimum of two (2) inches. Shape the lead flashing sheet to conform snugly to the underlying substrate. Apply two (2) fiberglass reinforcing plies over the lead sheet and mop over with hot asphalt. Extend all plies, including the base sheet, into the drain bowl and under the clamping ring.

c. The drain ring shall be set into flashing grade roof cement and tightened. The cast iron guard screen shall be installed over the roof drains, after the Contractor has verified the clamping ring has been tightened, and the drain is free of debris and is free flowing.

3.11 SHEET METAL/LEAD FLASHINGS

a. General Requirements:

1. Prior to incorporating into the roof system, all lead flanges (top and bottom) are to be primed with asphaltic primer. Primer must be allowed to dry a **MINIMUM OF 24 HOURS** prior to installing the membrane or flashings.
2. The Contractor shall flash all through deck penetrations with 4 lb. lead sleeves for open and unconnected pipes and conduits.
3. All penetrations that cannot be disconnected prior to installation of the roofing system shall receive a 4 lb. split lead flashing. The seams in the split flashing shall be continuously soldered prior to installation of the stripping plies.
4. Set all lead flanges into plastic roof cement over the installed field plies.
5. All flanges shall be flashed onto the roof system with two (2) fiberglass felts embedded into hot asphalt. The first ply shall extend a minimum of three (3) inches beyond the flange onto the membrane. The second ply shall extend a minimum of three (3) inches beyond the first stripping ply onto the membrane, covering the first ply completely:
   a) This application shall apply to all skylight flanges as well (if applicable).

3.12 WALKTRED

a. Specialty traffic pads/panels: Immediately after the roofing system installation is completed, torch-apply pads or panels at locations indicated on the architectural drawings or in a manner acceptable to the primary roofing material Manufacturer.

3.13 MISCELLANEOUS WORK ITEMS

a. The Contractor shall furnish and install 1" (thick) roof protection material under all wood pipe supports and duct support legs.

3.14 CLEANING

a. In areas where adjacent finished surfaces are soiled by work of this Section, consult manufacturer of surfaces for cleaning advice and conform to their documented instructions.
b. Repair or replace defaced or disfigured finishes caused by work of this Section.
c. Remove all roofing related materials, equipment, debris, etc. from job-site.

END OF SECTION - 07511

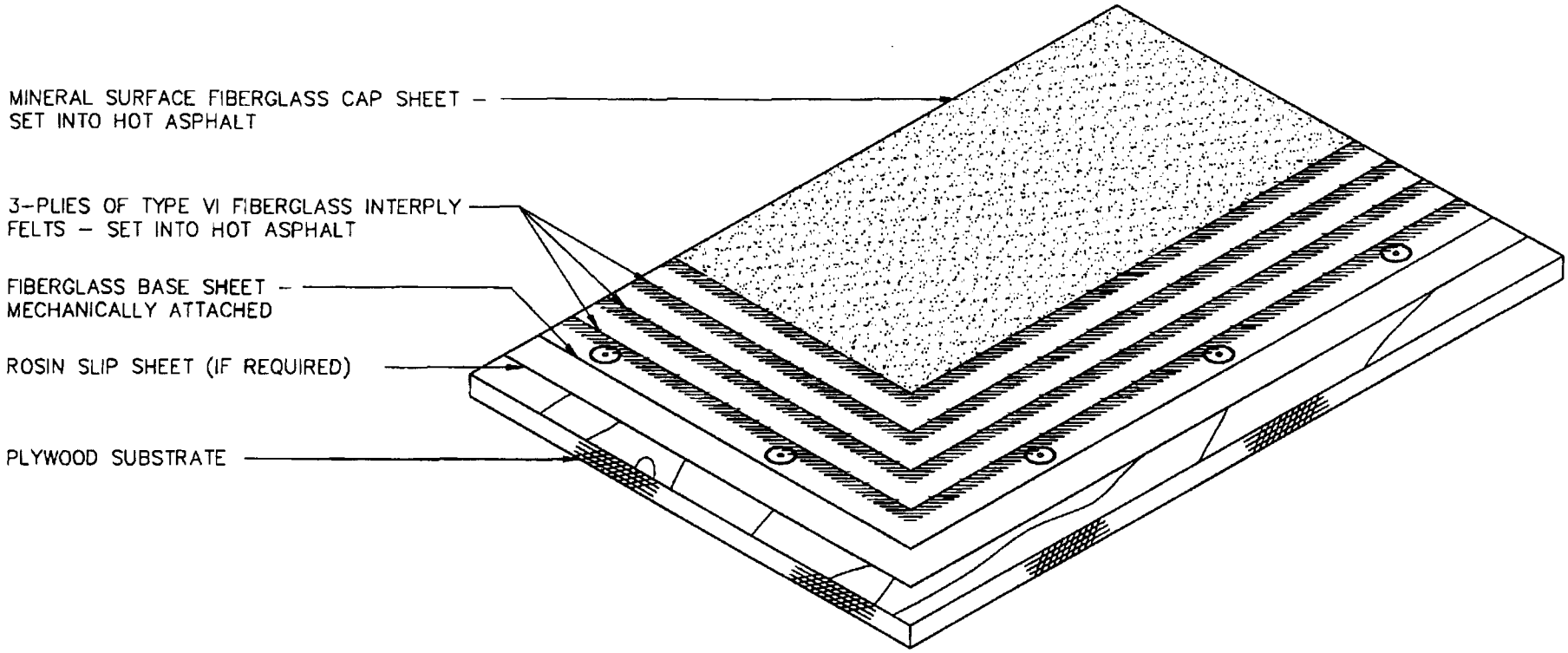

D7 / 1 **TYPICAL SECTION**
SCALE: NTS 5 Ply Built-Up Roofing

D7 CONSULTING INC. *3920 Birch Street, Suite 103* *Newport Beach, CA 92660*	*PITASSI ARCHITECTS* *RANCHO CUCAMONGA, CA*	*BIG LEAGUE DREAMS SPORTS COMPLEX* *PERRIS, CA*	FILE NAME: BLDSC DATE: 02/06/2009 DRWN BY: tw

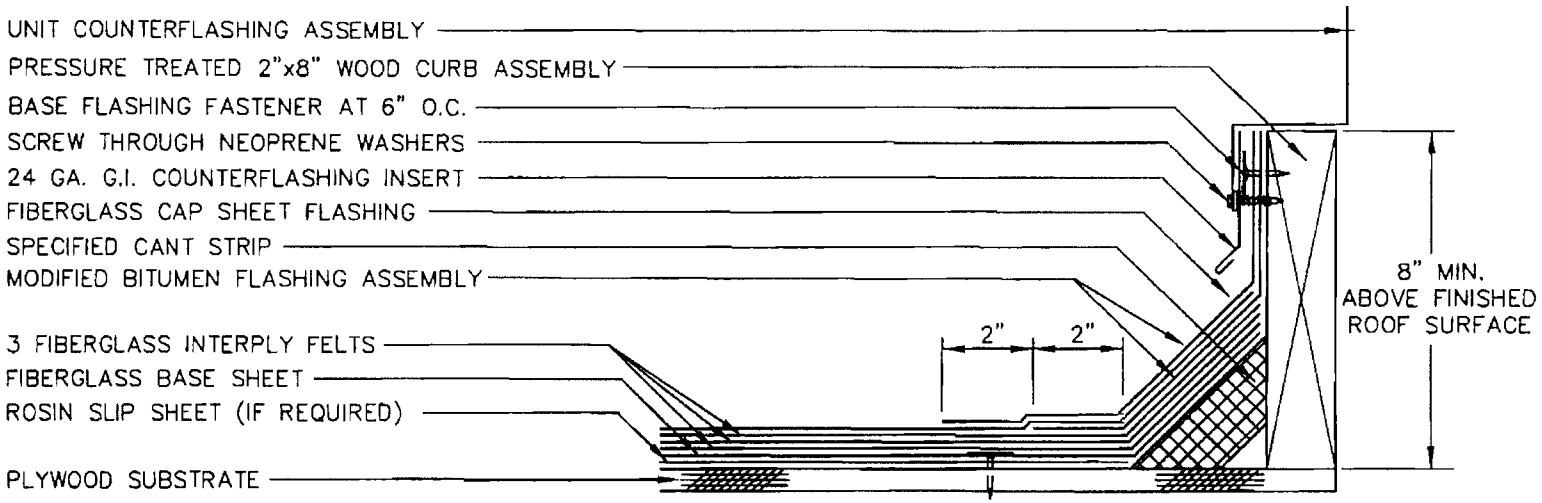

D7 / 2

TYPICAL CURB DETAIL

SCALE: NTS 5 Ply Built-Up Roofing

D7 CONSULTING INC. 3920 Birch Street, Suite 103 Newport Beach, CA 92660	PITASSI ARCHITECTS RANCHO CUCAMONGA, CA	BIG LEAGUE DREAMS SPORTS COMPLEX PERRIS, CA	FILE NAME: BLDSC DATE: 02/06/2009 DRWN BY: tw

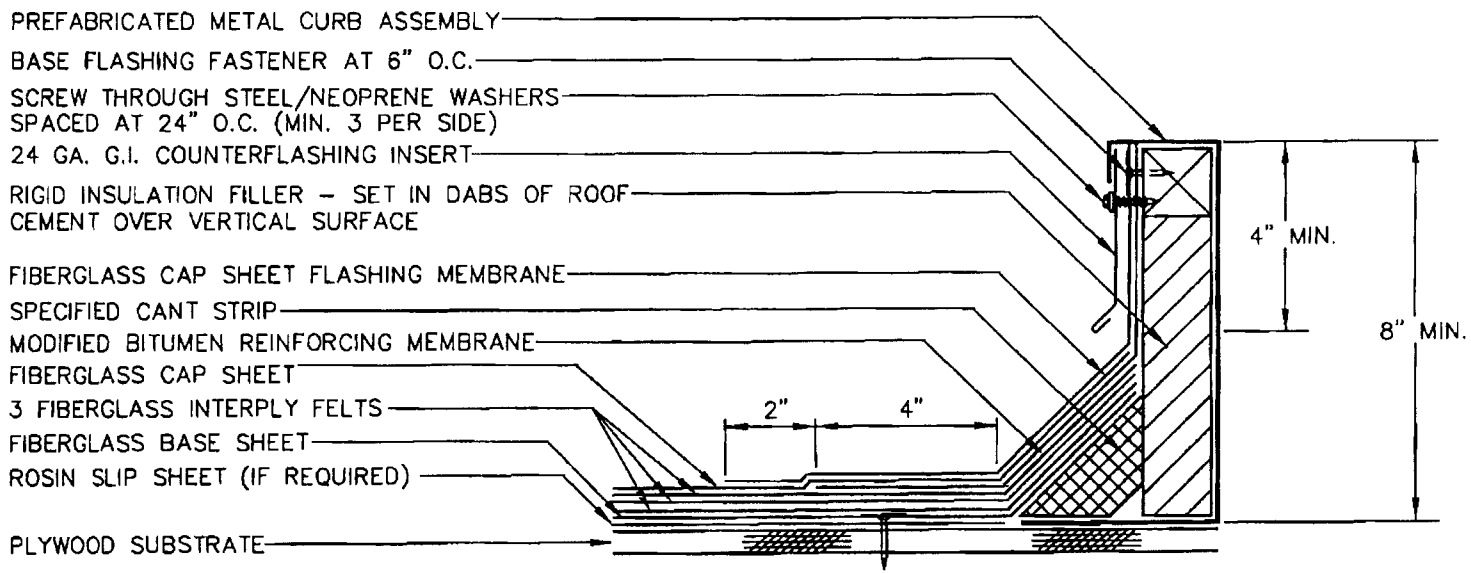

D7 / 3

PREFABRICATED CURB

SCALE: NTS — 5 Ply Built-Up Roofing

D7 CONSULTING INC. 3920 Birch Street, Suite 103 Newport Beach, CA 92660	PITASSI ARCHITECTS RANCHO CUCAMONGA, CA	BIG LEAGUE DREAMS SPORTS COMPLEX PERRIS, CA	FILE NAME: BLDSC DATE: 02/06/2009 DRWN BY: JW

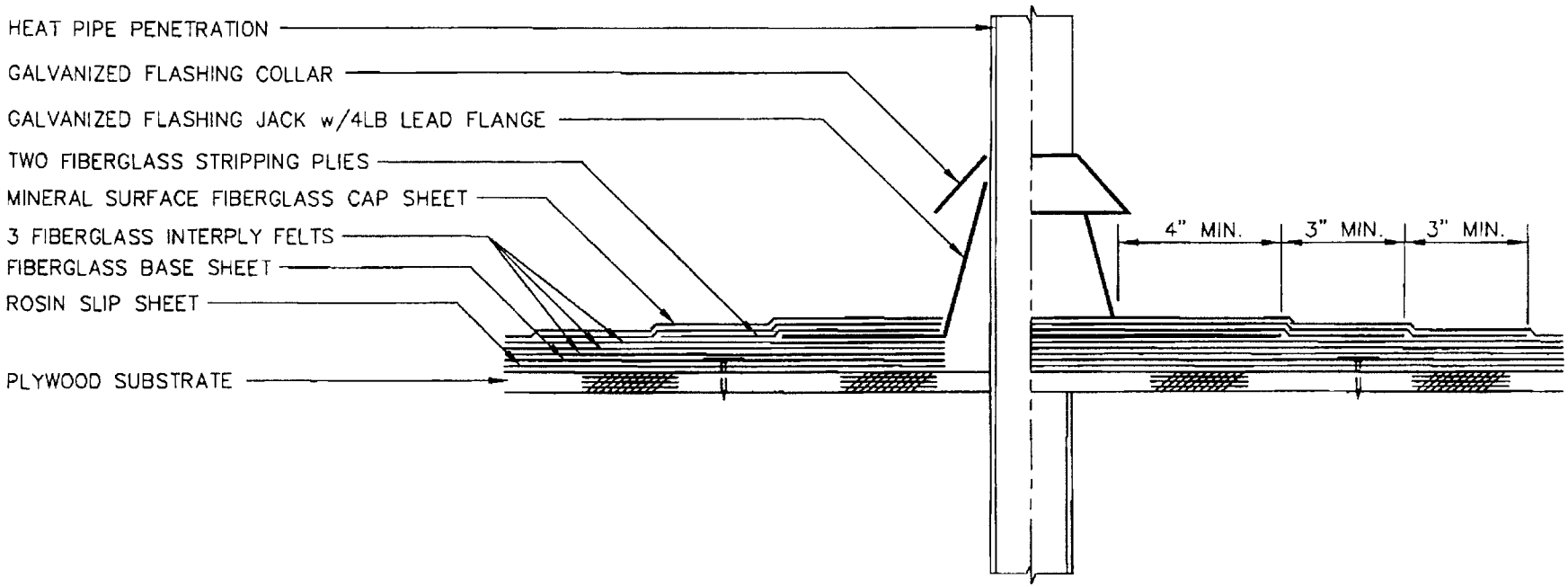

NOTE:
1. PRIME BOTH SIDES OF ALL FLANGES PRIOR TO INSTALLATION, THEN SET FLANGES INTO A FULL BED OF ROOF CEMENT,

D7 / 4

HEAT PIPE/VENT FLASHING
SCALE: NTS 5 Ply Built-Up Roofing

D7CONSULTING INC. 3920 Birch Street, Suite 103 Newport Beach, CA 92660	PITASSI ARCHITECTS RANCHO CUCAMONGA, CA	BIG LEAGUE DREAMS SPORTS COMPLEX PERRIS, CA	FILE NAME: BLDSC DATE: 02/06/2009 DRAWN BY:

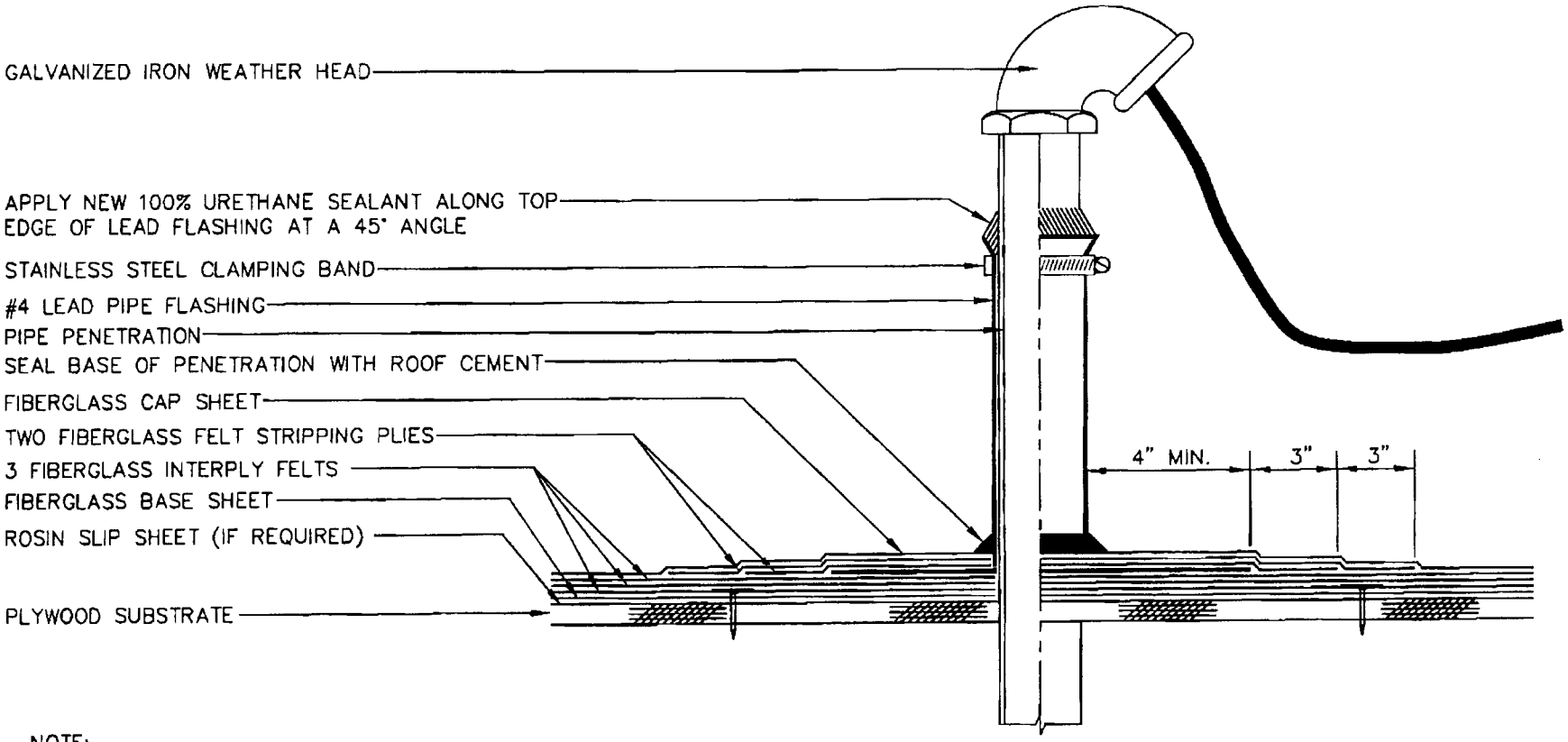

NOTE:
1. PRIME BOTH SIDES OF ALL FLANGES PRIOR TO INSTALLATION. SET FLANGES INTO A FULL BED OF ROOF CEMENT.

D7 / 5

CABLE PENETRATION
SCALE: NTS
5 Ply Built-Up Roofing

D7 CONSULTING INC. 3920 Birch Street, Suite 103 Newport Beach, CA 92660	PITASSI ARCHITECTS RANCHO CUCAMONGA, CA	BIG LEAGUE DREAMS SPORTS COMPLEX PERRIS, CA	FILE NAME: BLDSC DATE: 02/06/2009 DRWN BY:

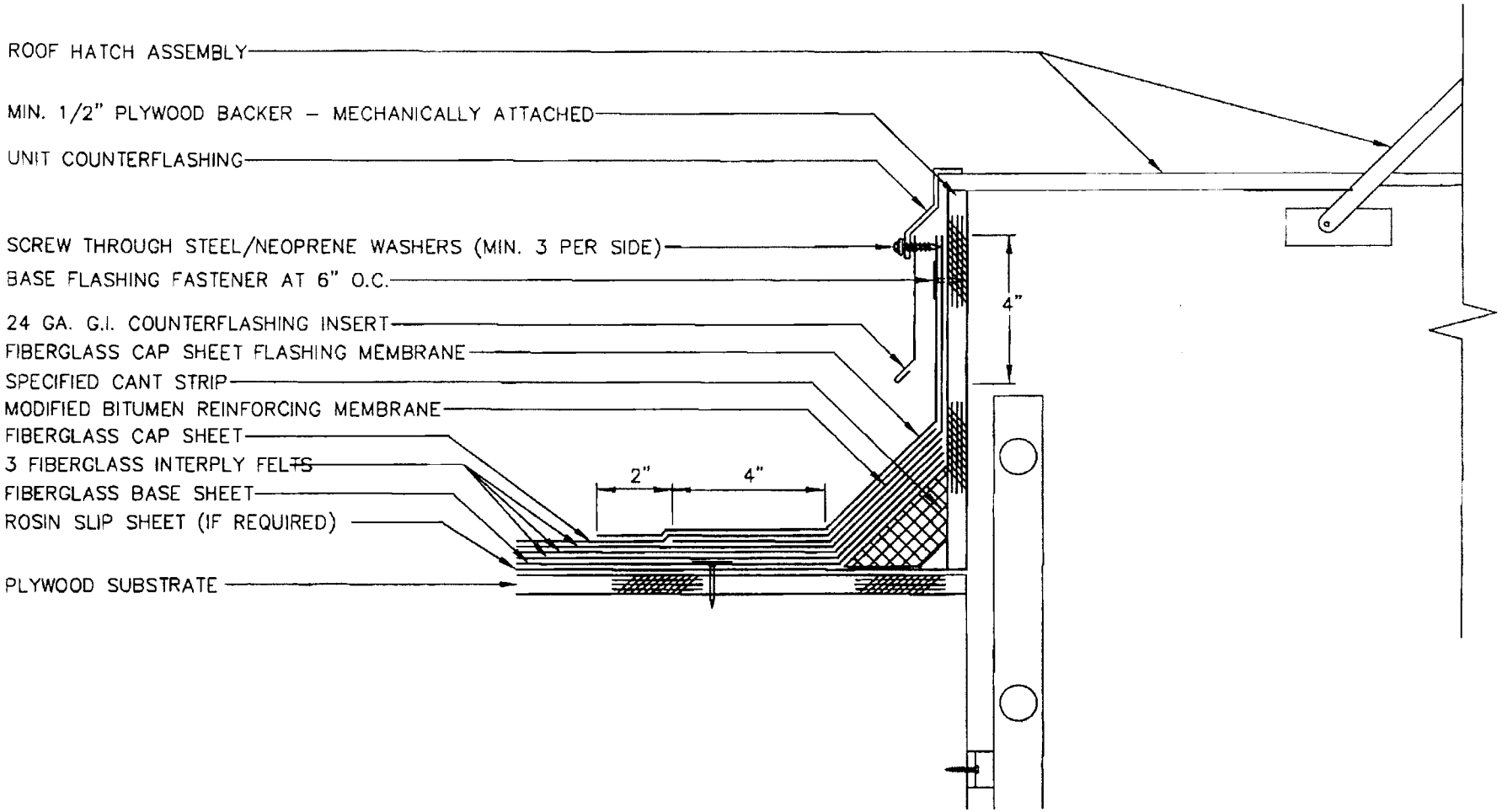

D7 / 6

ROOF HATCH

SCALE: NTS

5 Ply Built-Up Roofing

D7CONSULTING INC. 3920 Birch Street, Suite 103 Newport Beach, CA 92660	PITASSI ARCHITECTS RANCHO CUCAMONGA, CA	BIG LEAGUE DREAMS SPORTS COMPLEX PERRIS, CA	FILE NAME: BLDSC DATE: 02/06/2009 DRWN BY: SA

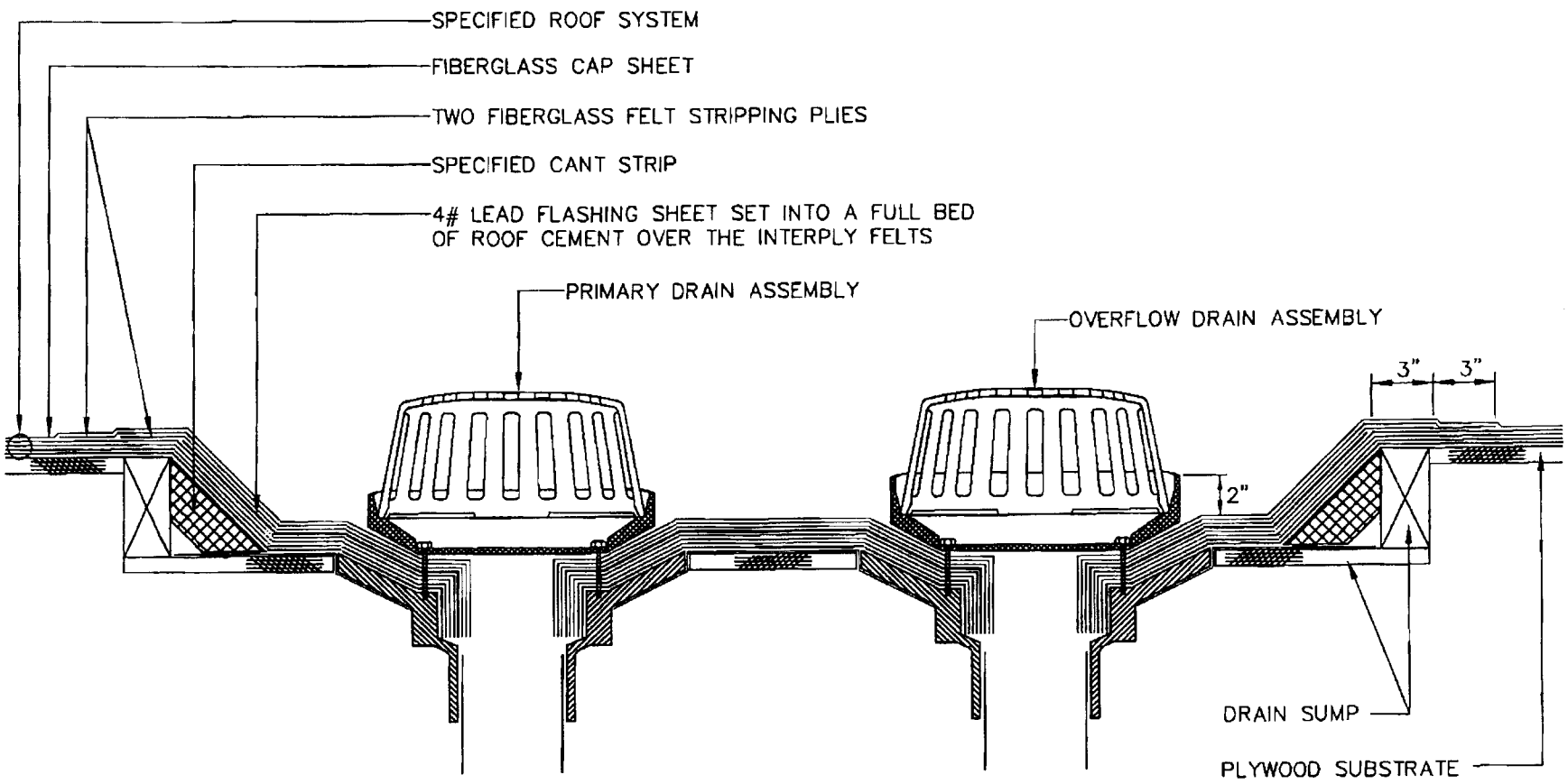

NOTE:
1. EXTEND LEAD FLASHING TO TOP OF SUMP.

D7 / 7

PRIMARY & OVERFLOW SUMPED DRAINS
SCALE: NTS
5 Ply Built-Up Roofing

D7 CONSULTING INC. 3920 Birch Street, Suite 103 Newport Beach, CA 92660	PITASSI ARCHITECTS RANCHO CUCAMONGA, CA	BIG LEAGUE DREAMS SPORTS COMPLEX PERRIS, CA	FILE NAME: BLDSC DATE: 02/06/2009 DRWN BY: tw

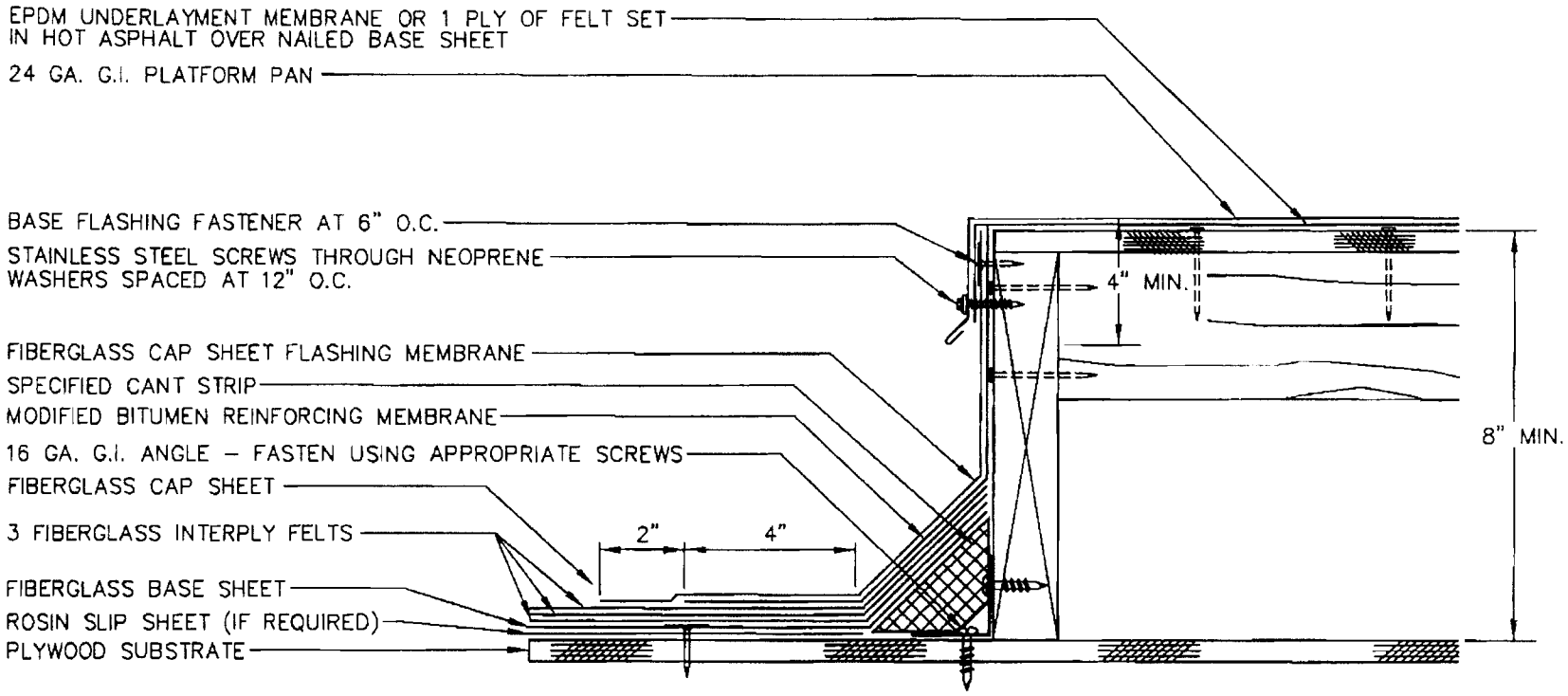

See Architectural Drawings for platform details

NOTES:

1. SIZE AND LOCATION OF PLATFORM SHALL BE AS NEEDED FOR STRUCTURAL SUPPORT AND ACCOMMODATION OF EQUIPMENT.
2. SEE ARCHITECURAL DRAWINGS FOR PLATFORM DETAILS

D7 / 8

FLASHING AT NEW PLATFORM

SCALE: NTS — 5 Ply Built-Up Roofing

D7 CONSULTING INC. 3920 Birch Street, Suite 103 Newport Beach, CA 92660	PITASSI ARCHITECTS RANCHO CUCAMONGA, CA	BIG LEAGUE DREAMS SPORTS COMPLEX PERRIS, CA	FILE NAME: BLDSC DATE: 02/06/2009 DRWN BY:

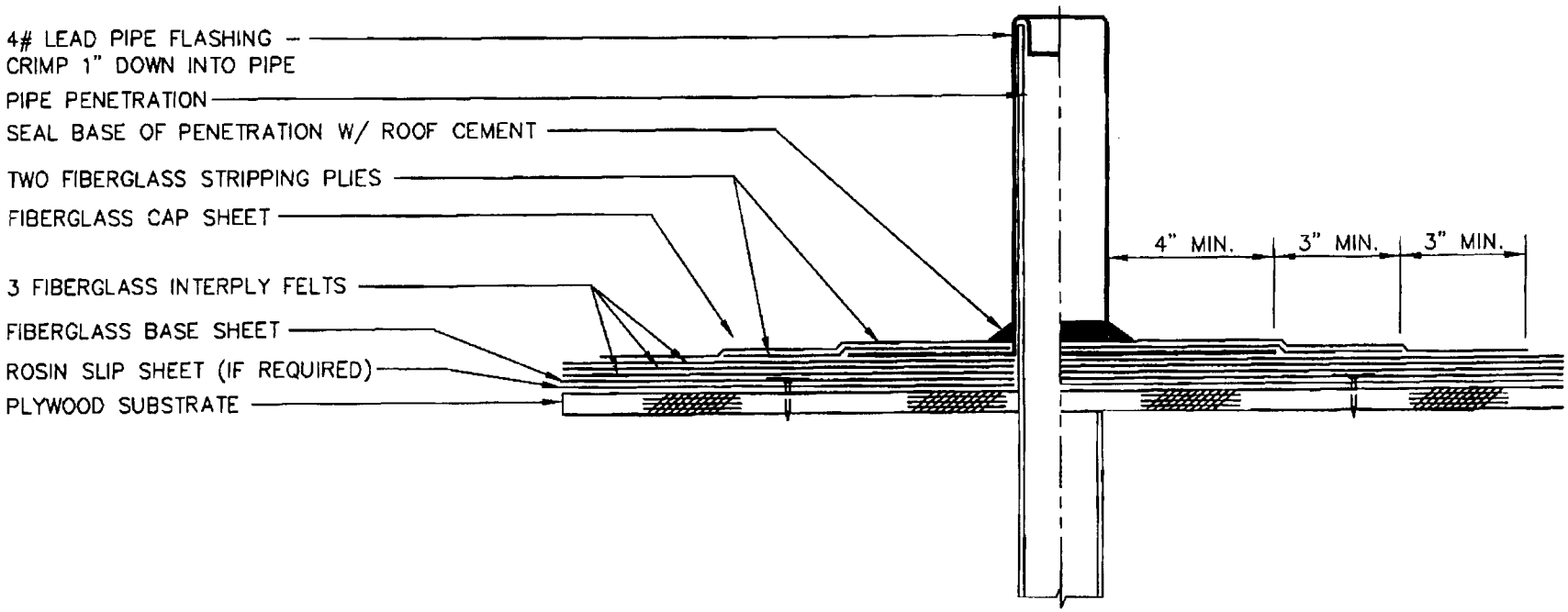

NOTE:
1. PRIME BOTH SIDES OF ALL FLANGES PRIOR TO INSTALLATION, THEN SET FLANGES INTO A FULL BED OF ROOF CEMENT.

D7 / 9

LEAD PIPE FLASHING - CRIMPED

SCALE: NTS — 5 Ply Built-Up Roofing

D7 CONSULTING INC. *3920 Birch Street, Suite 103* *Newport Beach, CA 92660*	*PITASSI ARCHITECTS* *RANCHO CUCAMONGA, CA*	*BIG LEAGUE DREAMS SPORTS COMPLEX* *PERRIS, CA*	FILE NAME: BLDSC DATE: 02/06/2009 DRWN BY: tw

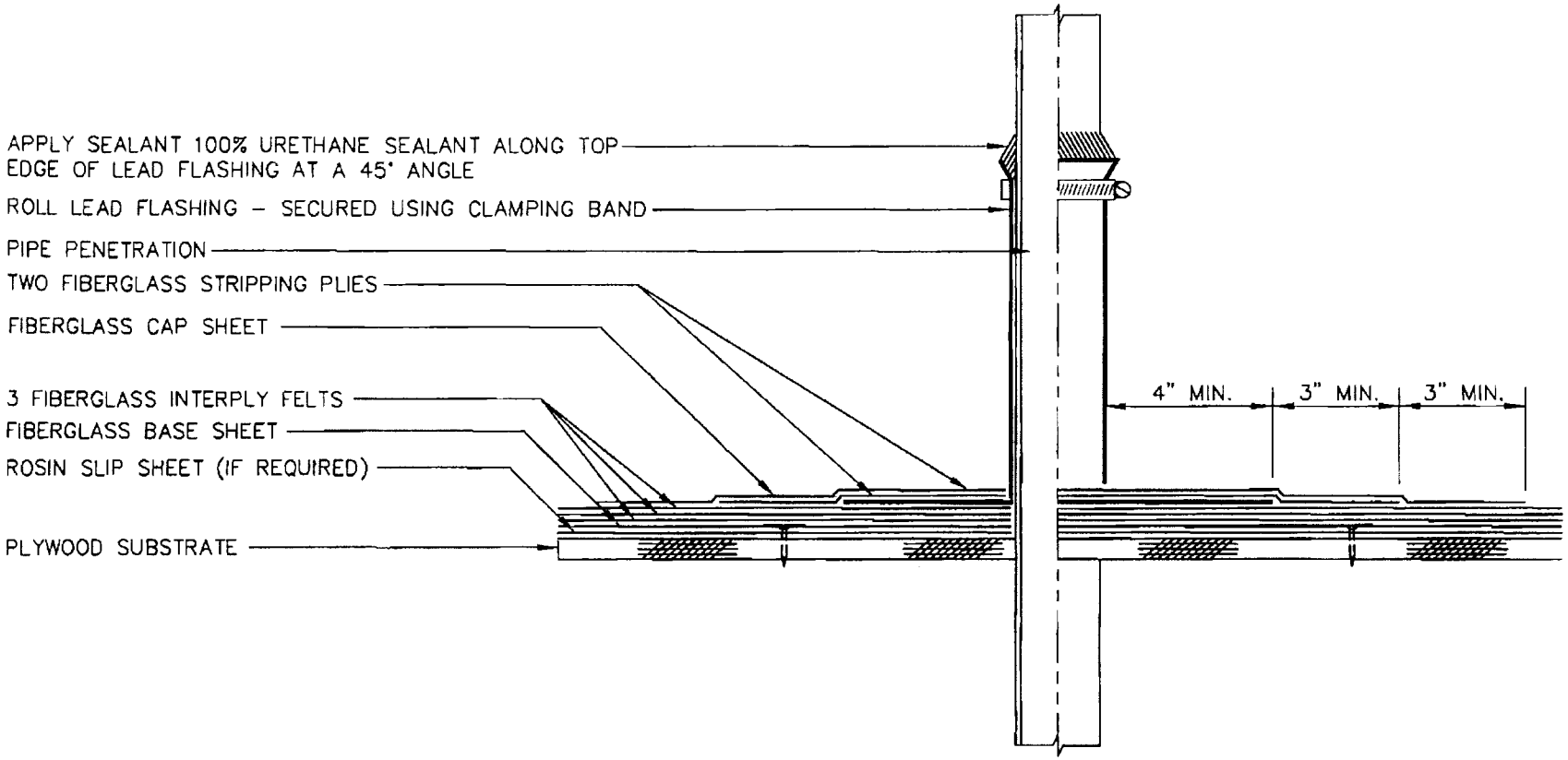

NOTE:
1. PRIME BOTH SIDES OF ALL FLANGES PRIOR TO INSTALLATION, THEN SET FLANGES INTO A FULL BED OF ROOF CEMENT.

D7 / 10

LEAD PIPE FLASHING - CLAMPED

SCALE: NTS — 5 Ply Built-Up Roofing

D7 CONSULTING INC. 3920 Birch Street, Suite 103 Newport Beach, CA 92660	PITASSI ARCHITECTS RANCHO CUCAMONGA, CA	BIG LEAGUE DREAMS SPORTS COMPLEX PERRIS, CA	FILE NAME: BLDSC DATE: 02/06/2009 DRWN BY:

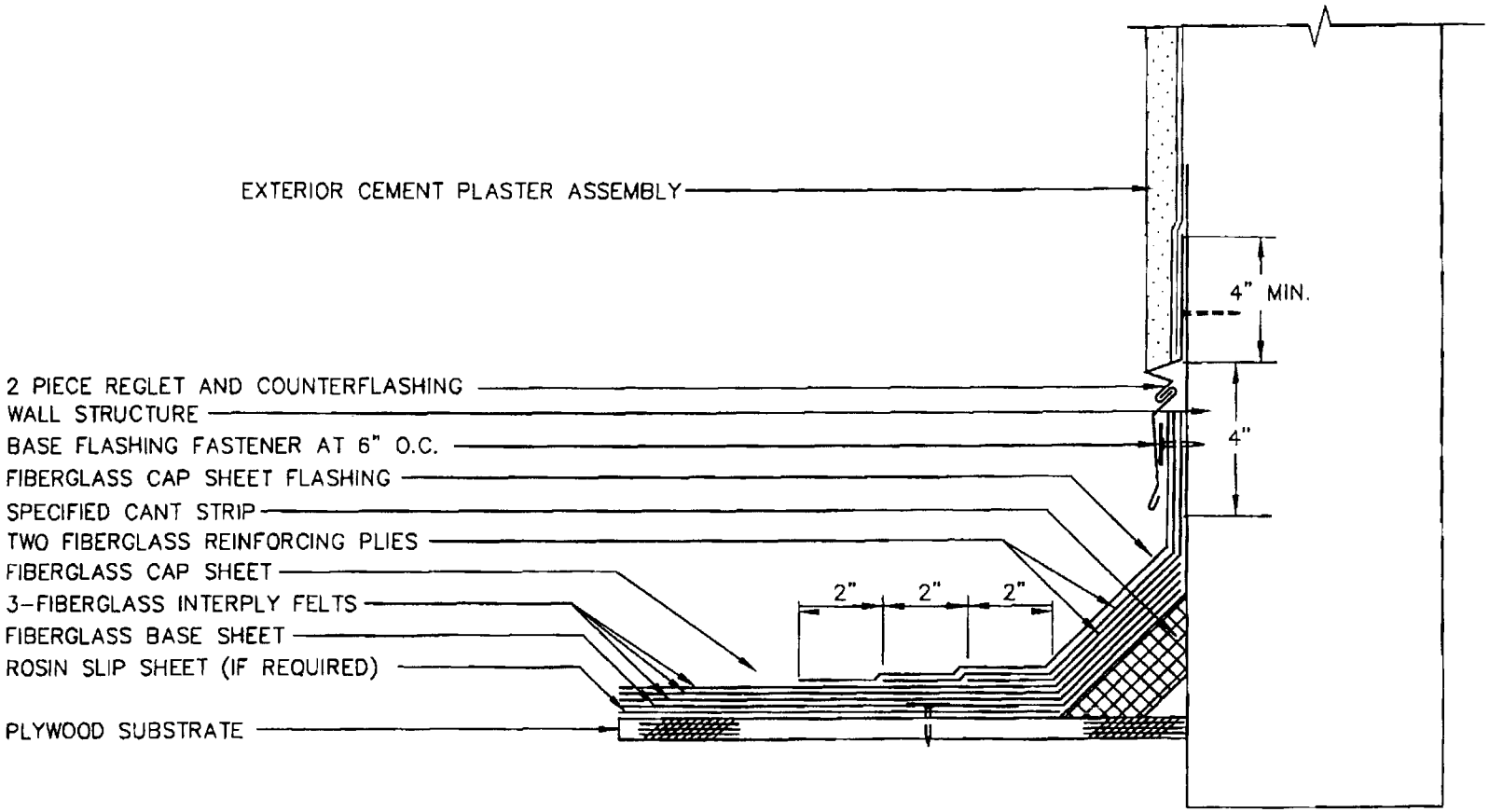

D7 / 11

FLASHING @ PLASTER WALL

SCALE: NTS — 5 Ply Built-up Roofing

D7 CONSULTING INC. 3920 Birch Street, Suite 103 Newport Beach, CA 92660	PITASSI ARCHITECTS RANCHO CUCAMONGA, CA	BIG LEAGUE DREAMS SPORTS COMPLEX PERRIS, CA	FILE NAME: BLDSC DATE: 02/06/2009 DRWN BY:

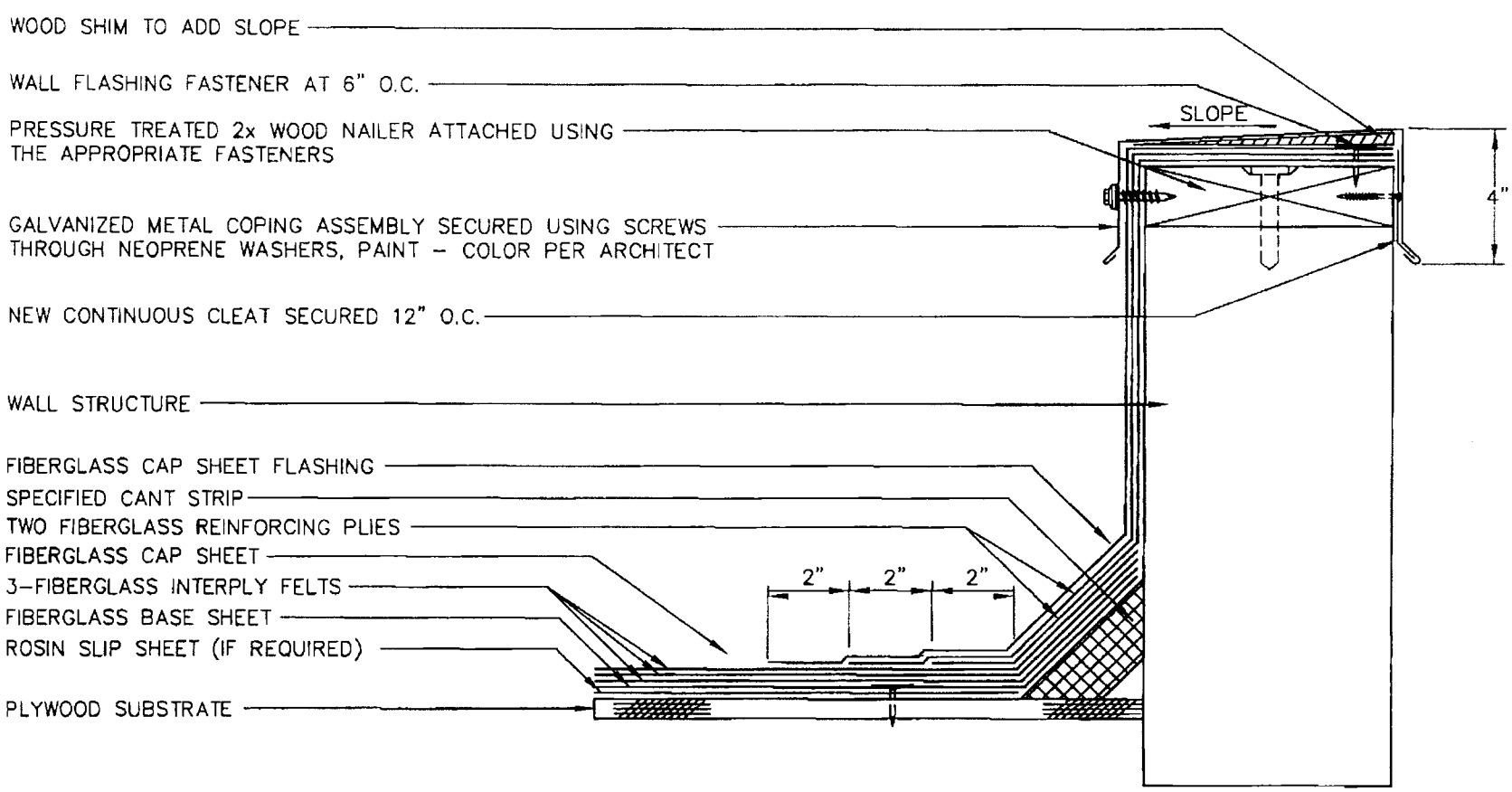

D7 / 12

FLASHING @ PARAPET WALL w/ COPING

SCALE: NTS

6 Ply Built-Up Roofing

D7 CONSULTING INC. 3920 Birch Street, Suite 103 Newport Beach, CA 92660	PITASSI ARCHITECTS RANCHO CUCAMONGA, CA	BIG LEAGUE DREAMS SPORTS COMPLEX PERRIS, CA	FILE NAME: BLDSC DATE: 02/06/2009 DRWN BY: